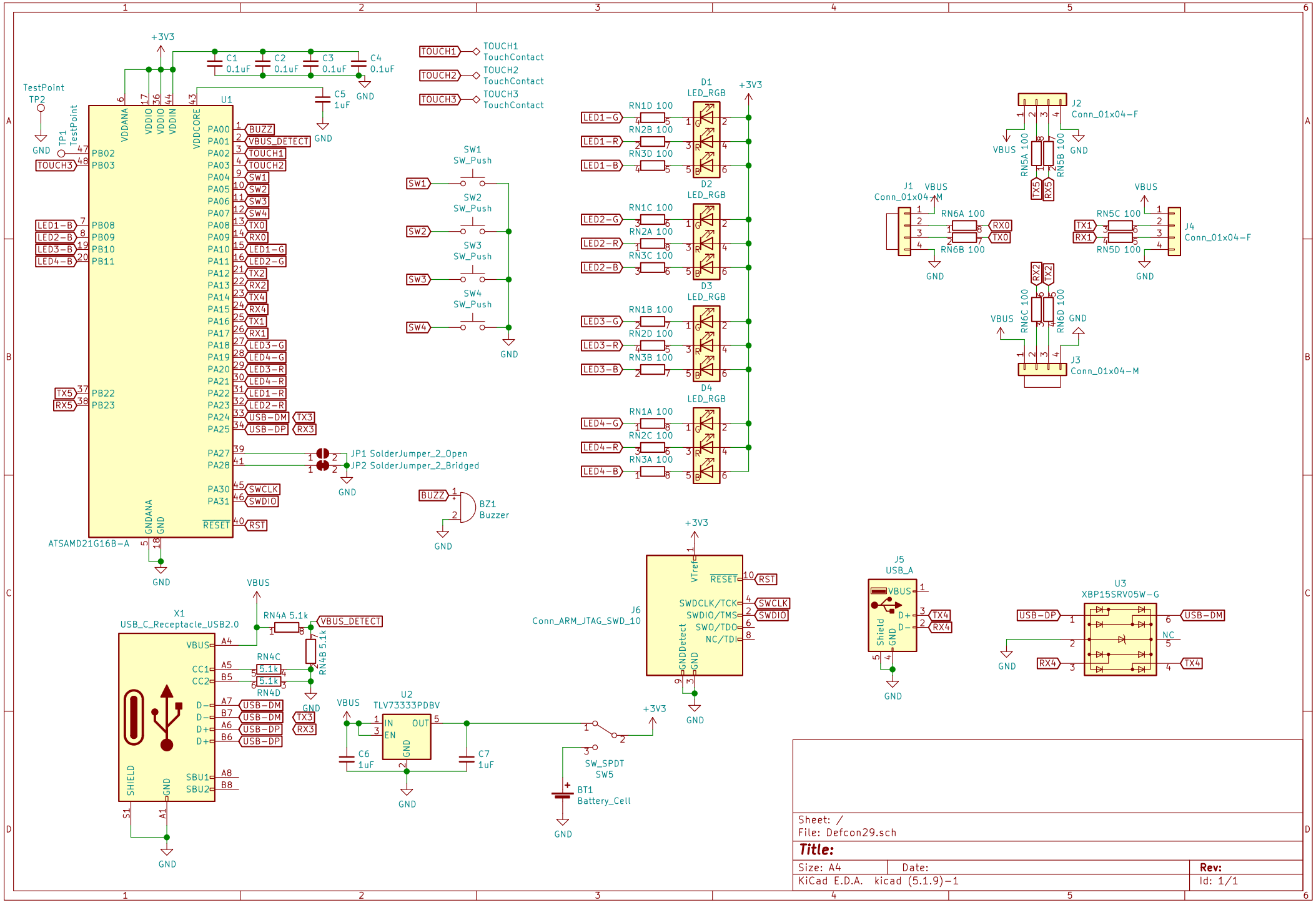
+3V3
C1 0.1uF
C2 0.1uF
C3 0.1uF
C4 0.1uF
C5 1uF
GND
TestPoint
TP2
TP1
TestPoint
U1
ATSAMD21G16B-A
VDDANA
VDDIO
VDDIO
VDDIN
VDDCORE
GNDANA
GND
PB02
PB03
PB08
PB09
PB10
PB11
PB22
PB23
PA00
PA01
PA02
PA03
PA04
PA05
PA06
PA07
PA08
PA09
PA10
PA11
PA12
PA13
PA14
PA15
PA16
PA17
PA18
PA19
PA20
PA21
PA22
PA23
PA24
PA25
PA27
PA28
PA30
PA31
RESET
BUZZ
VBUS_DETECT
TOUCH1
TOUCH2
SW1
SW2
SW3
SW4
TX0
RX0
LED1-G
LED2-G
TX2
RX2
TX4
RX4
TX1
RX1
LED3-G
LED4-G
LED3-R
LED4-R
LED1-R
LED2-R
USB-DM
USB-DP
TX3
RX3
SWCLK
SWDIO
RST
TOUCH3
LED1-B
LED2-B
LED3-B
LED4-B
TX5
RX5
JP1 SolderJumper_2_Open
JP2 SolderJumper_2_Bridged
TOUCH1 TouchContact
TOUCH2 TouchContact
TOUCH3 TouchContact
SW1 SW_Push
SW2 SW_Push
SW3 SW_Push
SW4 SW_Push
BZ1 Buzzer
D1 LED_RGB
D2 LED_RGB
D3 LED_RGB
D4 LED_RGB
RN1D 100
RN2B 100
RN3D 100
RN1C 100
RN2A 100
RN3C 100
RN1B 100
RN2D 100
RN3B 100
RN1A 100
RN2C 100
RN3A 100
J1 Conn_01x04-M
J2 Conn_01x04-F
J3 Conn_01x04-M
J4 Conn_01x04-F
RN6A 100
RN6B 100
RN5A 100
RN5B 100
RN5C 100
RN5D 100
RN6C 100
RN6D 100
VBUS
J5 USB_A
U3 XBP15SRV05W-G
NC
J6 Conn_ARM_JTAG_SWD_10
VTref
SWDCLK/TCK
SWDIO/TMS
SWO/TDO
NC/TDI
GNDDetect
X1 USB_C_Receptacle_USB2.0
RN4A 5.1k
RN4B 5.1k
RN4C 5.1k
RN4D 5.1k
CC1
CC2
SHIELD
SBU1
SBU2
S1
A1
U2 TLV73333PDBV
IN
EN
OUT
C6 1uF
C7 1uF
SW_SPDT SW5
BT1 Battery_Cell
Sheet: /
File: Defcon29.sch
Title:
Size: A4
Date:
Rev:
KiCad E.D.A. kicad (5.1.9)-1
Id: 1/1